ATLANTIS

WATERPARKS

Atlantis Water Parks & Pool Systems
Your Ultimate Water Park Solutions Provider

Established in 1996 by three visionary mechanical engineers in Istanbul, Turkey, Atlantis Water Parks & Pool Systems has risen to unparalleled heights in the water park industry. Today, we proudly stand as the world's sole supplier of a comprehensive range of water park systems, including cutting-edge surf systems and innovative flow systems.
At Atlantis Water Parks & Pool Systems, we specialize in delivering exceptional products and services in the water park sector. Our expertise spans the design, manufacturing, supplying and installation of water park systems, as well as the provision of waterslide circulation systems and filtration systems for both commercial and private pools.
With our extensive portfolio, we offer a wide array of exhilarating attractions, including Surf systems, Wave systems, Water Slides, Multi-Level Water Play Structures, Water Animations, Lazy River flow systems, Rafting River systems, Torrent River, Aqua Disco, and much more.

Atlantis Water Parks & Pool Systems - Your Gateway to Unforgettable Water Park Experiences

---

FACTORY – HEAD OFFICE
Ikitelli Organize San. Bölgesi Tormak
San. Sitesi. Y Blok No:13
Başakşehir - İstanbul - Türkiye 34490
www.atlantiswaterparks.com

ATLANTIS

WATERPARKS

ATLANTIS
WATERPARKS

Atlantis Water Parks & Pool Systems - Your Gateway to Unforgettable Water Park Experiences

670+
PROJECTS

65
COUNTRIES

30
YEARS OF EXPERIENCE

Projects of all sizes delivered worldwide since 1996

ATLANTIS
WATERPARKS

Atlantis Waterparks: Your Global Leader in Water Park Systems

Atlantis Waterparks proudly stands as the world's foremost provider of architectural and technical design, supply, and installation services for all water park systems. With an unwavering commitment to creativity, innovation, and uncompromising quality, we set the industry standard for excellence.
Our extensive track record spans across the globe, as we have successfully completed numerous projects that have captivated audiences and exceeded expectations. From concept to completion, our team of experts is dedicated to bringing your vision to life and creating extraordinary water park experiences for visitors of all ages.
Experience the difference of working with a trusted industry leader. Atlantis Waterparks for your next water park venture and let us create a world-class destination that will leave a lasting impression on your guests.

Atlantis Waterparks: Redefining Water Park Experiences Worldwide.



Aqua Paradise Water Park, located in the beautiful city of Nesebar, Bulgaria, is a premier destination for aquatic fun and excitement. Since its establishment in 2006, the park has spanned an impressive area of 46,000 square meters, offering a wide range of thrilling experiences. With a remarkable collection of 60 attractions and 38 exhilarating water slides, Aqua Paradise Water Park guarantees endless entertainment for visitors of all ages.

AQUAPARK
NESSEBAR









"Little Greece" is a charming theme playground inspired by the iconic blue and white huts of Santorini, Greece. Spanning a large area, the park offers an immersive experience with interactive games and family-friendly attractions. The architectural style throughout the park exudes the classic blue and white aesthetic, captivating visitors from the moment they enter

SANTORINI
WATER FANTASY



Located in Gamuda Cove, just 45 minutes south of Kuala Lumpur, Splashmania is a premier waterpark featuring a Giant Wave Pool, Lazy River, Triple Surf Pool, Aquadisco, Kids Group, and Extreme Slides. With its wide range of attractions, it is one of the largest waterparks in the Pacific Asia region.







Tropical Islands is Europe's largest tropical holiday world. Here you can forget the daily grind and find relaxation, action and fun for yourself, your family, your partners, your friends. With its countless attractions and superlative themed worlds, there is something for everyone. Germany's largest water slide tower, the largest indoor rain world in the world or even 10,000 m2 of sauna and spa facility awaits you.

Damac Hills 2 Residential Project

Damac Hills 2 is a residential community located in Dubai, featuring a central aquapark. This development includes a wide array of sports facilities. The aquapark itself boasts several key attractions, including a wave pool, a lazy river, and a surf pool.









Park Vega Waterpark is a major aquatic attraction located in Agbor, Delta State, Nigeria.
It is known for having West Africa's largest wave pool, which covers a significant area and mimics ocean waves. The park offers a variety of attractions for all ages, including thrilling water slides like the Space-Hole and Freefall, as well as a colorful Aqua Tower and Splash Pad for children and families. Additional amenities include an activity pool, a relax pool, and a swim-up bar.



Sunrise Waterpark is part of the larger Sunrise Hills Estate project, a 5 million square meter mixed-use development in Abuja. With Phase 1 of the project already completed, featuring over 110 constructed units with a 100% occupancy rate, the focus has now shifted to the water park.







VinWonders Nha Trang Water Park is one of the most popular attractions in the amusement park of VinWonders Nha Trang. Thanks to the wide variety of high-quality games available, this water park promises a great deal of fun for visitors.

Revolutionizing the Future of Entertainment and Waterpark



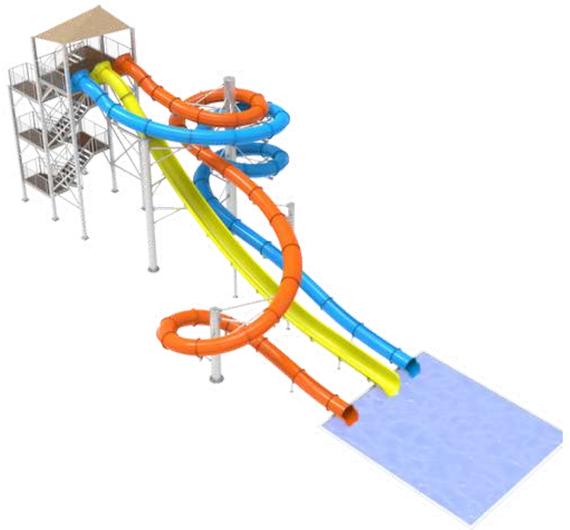

Achieving Success Through Comprehensive Master Planning

Creating a successful water park experience requires meticulous master planning to ensure the comfort and safety of large crowds. Our Master Plan outlines the organization and flow of the park, providing flexibility for future development. It serves as a reference point for design and construction, a benchmark for project completion, and a roadmap for the park's ongoing evolution and growth.



Engineering Excellence Crafting Unforgettable Waterpark Experiences

Experience the art of engineering excellence with us. As a premier waterpark building company, we take pride in our unwavering commitment to quality. From innovative design to precise manufacturing, we create immersive aquatic wonders that exceed expectations. With our comprehensive engineering services, we ensure your waterpark thrills and delights for years to come. Join us in shaping the future of waterpark engineering.

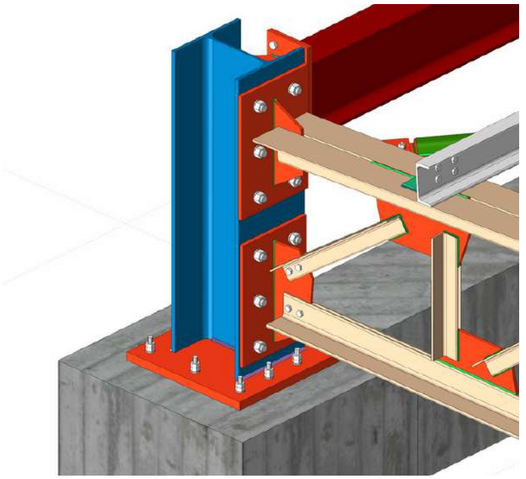





With our extensive product range, we cater to every need of water parks.

At Atlantis Waterparks, our business is built around meeting our clients' needs. We offer a comprehensive product suite that provides a wide range of experiences for all demographics, making us a convenient single provider. We prioritize quality, ensuring that our guests can feel the excellence in our attractions. With a focus on operational and energy efficiency, we help control running costs. Our attractions are designed to stand the test of time, maintaining their popularity for years to come. We invest in top industry talent who bring innovation, insight, and foresight to push the boundaries of theme and water park attractions. Our goal is to create inclusive, entertaining, and safe experiences for everyone, giving your park the winning mix of rides it needs to succeed.







With our extensive product range,
we cater to every need of water parks.



WATER SLIDES



AQUAPLAY



SPLASH PARK

With our extensive product range,
we cater to every need of water parks.



SURF POOL



WAVE POOL



RIVER SYSTEM

With our extensive product range,
we cater to every need of water parks.



AQUADISCO



FILTRATION SYSTEM



CIRCULATION SYSTEM

ATLANTIS

WATERPARKS

MEMBERSHIPS

IAAPA EXPO

WORLD WATERPARK ASSOCIATION

SEA EXPO

International Organization for Standardization ISO 9001

PISCINE GLOBAL

ULUSAL HAVUZ ENSTİTÜSÜ UHE NATIONAL POOL INSTITUTE



Global Reach, Exceptional Services: Excellence Worldwide

At Atlantis Waterparks, we specialize in providing tailored solutions and exceptional service to clients around the world. With our global presence and extensive expertise, we are able to meet the unique needs of each project, no matter the location. From waterpark design and construction to engineering services, our team is committed to delivering excellence on a global scale. Experience the difference of working with a company that combines personalized solutions with a global reach. Contact us today to discuss your project requirements and discover how we can bring your vision to life, anywhere in the world.